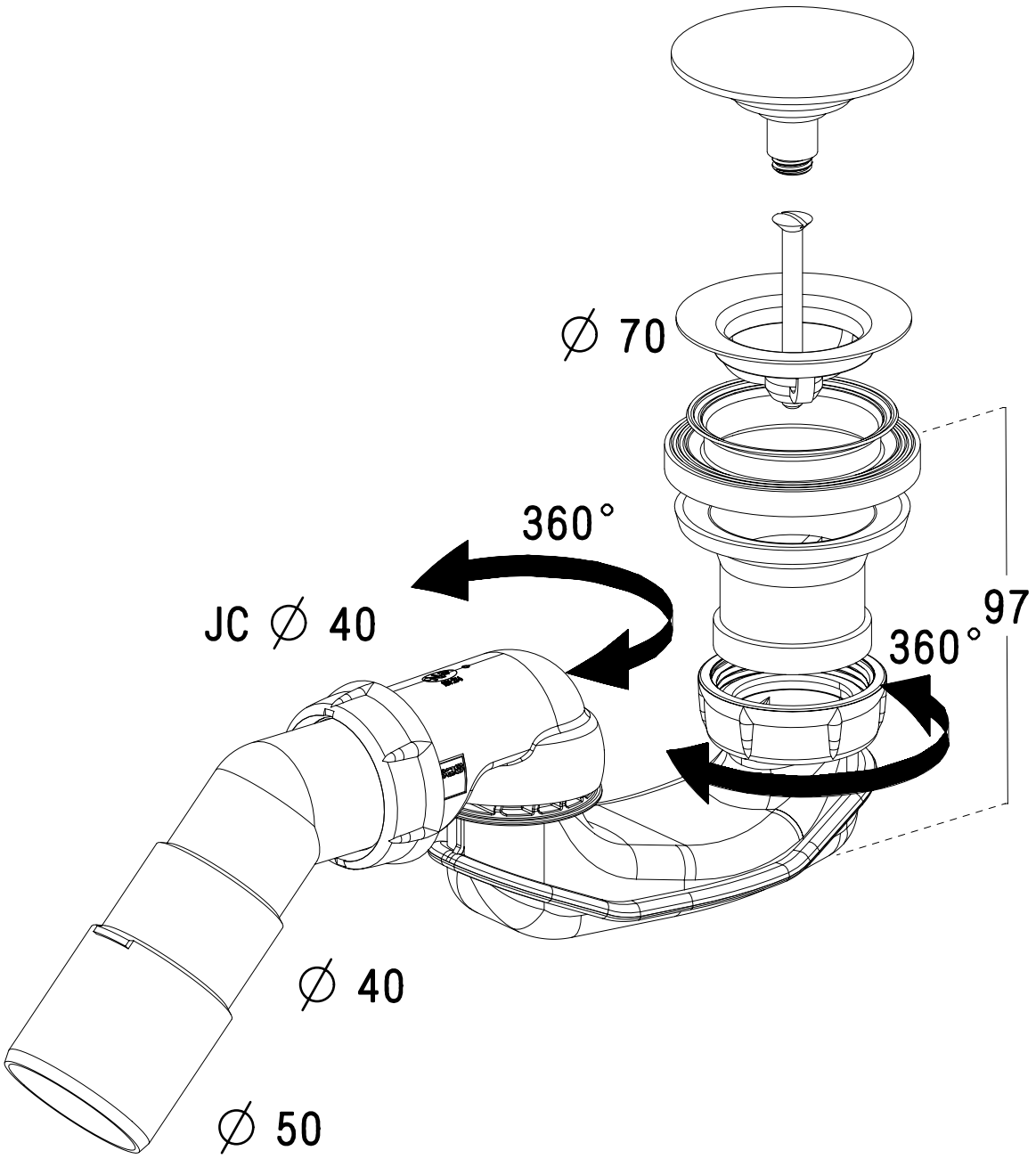
∅ 70
360°
JC ∅ 40
360°
97
∅ 40
∅ 50